300 SERIES TRACK

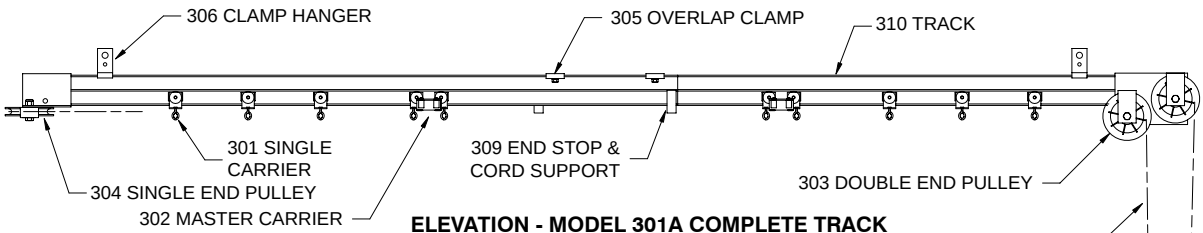

ELEVATION - MODEL 301A COMPLETE TRACK

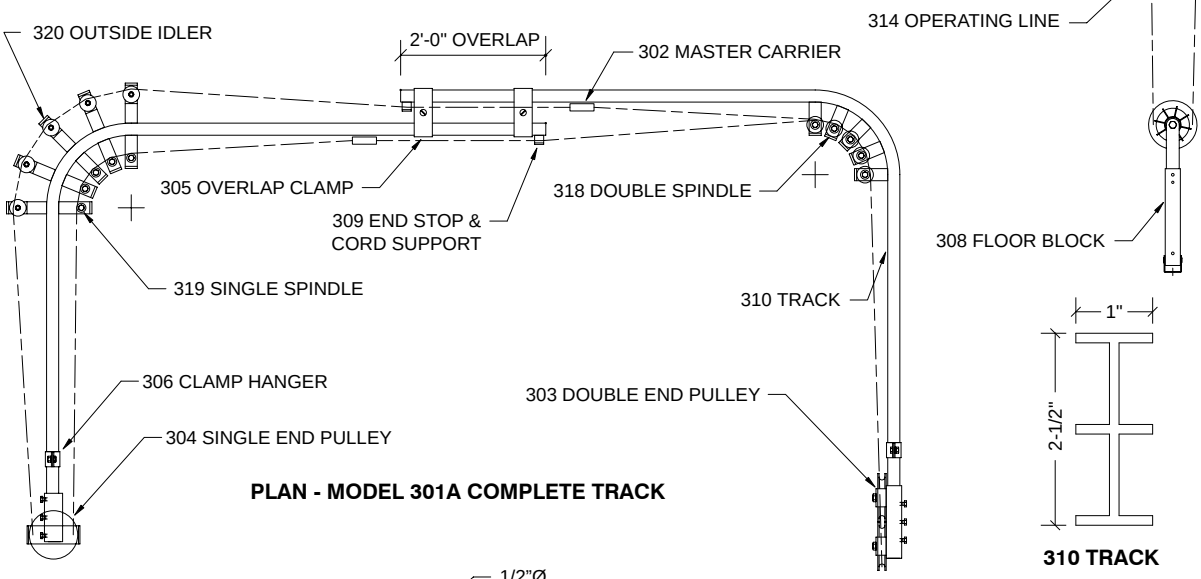

PLAN - MODEL 301A COMPLETE TRACK

310 TRACK

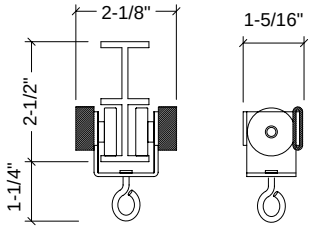

301 SINGLE CARRIER

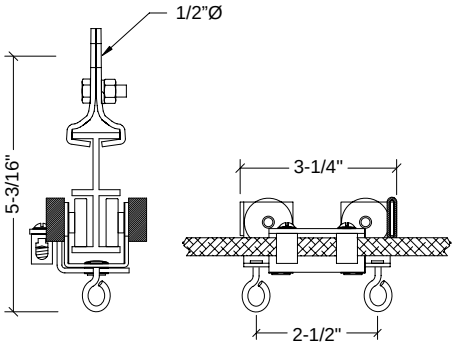

302 MASTER CARRIER

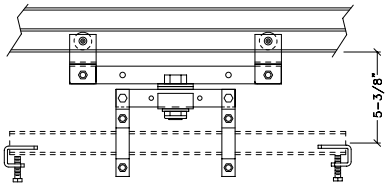

30 PIVOT DEVICE

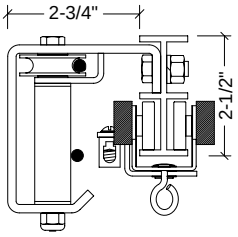

318 DOUBLE SPINDLE

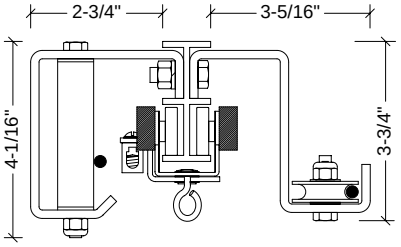

319 SINGLE SPINDLE **320 OUTSIDE IDLER**

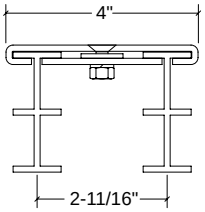

TRACKS AT CENTER OVERLAP

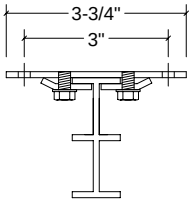

311 CEILING CLAMP

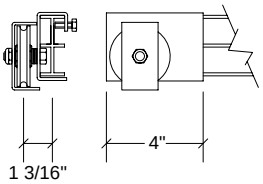

304A SINGLE END PULLEY

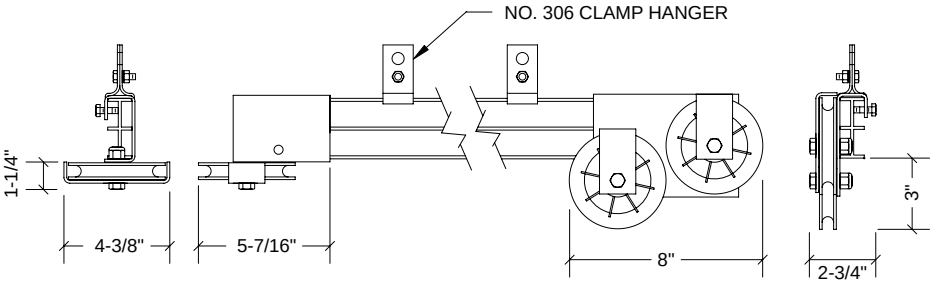

304 SINGLE END PULLEY **303 DOUBLE END PULLEY**